ENGINEERING
TOMORROW

Data sheet

Hand operated regulating valves
Types REG-SA and REG-SB

REG-SA and REG-SB are angleway and straightway hand operated regulating valves, which act as normal shut-off valves in closed position.

The valves are available in two different versions – REG-SA and REG-SB designed for regulation purposes in liquid and expansion lines.

The valves are designed to meet the strict quality requirements on refrigerating installations specified by the international classification societies and are carefully designed to present favourable flow conditions and accurate linear characteristics.

REG-SA and REG-SB are equipped with vented cap and internal backseating enables replacement of the spindle seal whilst the valve is active, i.e. under pressure.

Features

- Applicable to HCFC, HFC, R717 (Ammonia), R744 (CO_2), Propane, Butane, Iso-Butane and Ethane. R717 Heat Pump and Propylene applications with replaced O-ring.
- Modular Concept:
  - Each valve housing is available with several different connection types and sizes.
  - Possible to convert REG-SA or REG-SB to any other product in the Flexline™ SVL family (shut-off valve, check & stop valve, check valve or strainer) just by replacing the complete top part.
- Fast and easy valve overhaul service. It is easy to replace the top part and no welding is needed.
- Designed to ensure perfect regulation
- Internal backseating enables replacement of the spindle seal whilst the valve is active, i.e. under pressure.
- Easy to disassemble for inspection and possible repair.
- Long neck versions (DN 15 to DN 40) for insulated systems available from parts programme.
- Max. operating pressure: 52 bar g (754 psi g)
- Temperature range: –60/+150°C (–76/+302°F)
- Acts as a normal shut-off valve in closed position.
- Housing and bonnet material is low temperature steel according to requirements of the Pressure Equipment Directive and other international classification authorities.
- Exact capacity and setting of the valve can be calculated for all refrigerants by means of Coolselector®2 (Danfoss calculation and selection software).
- Classification: DNV, CRN, BV, EAC etc. To get an updated list of certification on the products please contact your local Danfoss Sales Company.

Design

Housing
Housing is Standard SVA angleway or straightway housing allowing other inserts from the SVL platform to be installed.
Material is special, cold resistant steel

Connections
Available with the following connections:

- Butt-weld ANSI (B 36.10 Schedule 80)
  – DN 10 - 40 ($^3/_8$ - 1½ in.)
- Butt-weld ANSI (B 36.10 Schedule 40)
  – DN 50 - 65 (2 - 2½ in.)
- Socket weld (ANSI B 16.11)
  – DN 15 - 40 (½ - 1½ in.)
- FPT inside pipe thread, NPT (ANSI/ASME B 1.20.1)
  – DN 15 - 32 (½ - 1¼ in.)

The cone
The valves are available in two different versions – REG-SA with an A cone and REG-SB with a B cone. The A cone is designed for expansion lines, while the B cone is designed for regulating purposes e.g. liquid lines.

The valve cone is designed to ensure perfect regulation and provide an extensive regulating area. Irrespective of the refrigerant used, it is easy to obtain the correct capacity. A cone seal ring provides perfect sealing at a minimum closing momentum.

The valve cone can be turned on the spindle, thus there will be no friction between the cone and the seat when the valve is opened and closed.
Spindle
The spindle is made of polished stainless steel, which is ideal for O-ring sealing.

Packing gland - REG-SA and REG-SB
The "full temperature range" packing gland ensures perfect tightness in the whole range: –60/+150°C (–76/+302°F). The packing glands are equipped with a scraper ring to prevent penetration of dirt and ice.

Installation
Install the valve with the spindle up or in horizontal position. The flow must be directed towards the cone.

The valve is designed to withstand high internal pressure. However, the piping system in general should be designed to avoid liquid traps and reduce the risk of hydraulic pressure caused by thermal expansion.

For further information refer to product instruction for REG-SA and REG-SB.

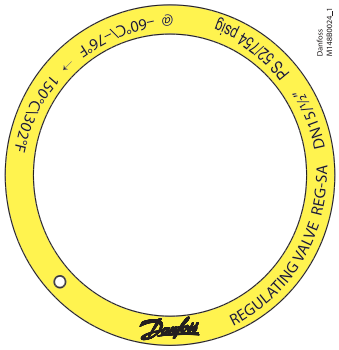

Example of marking ring, REG-SA

Pressure Equipment Directive (PED)
REG valves are approved according to the European standard specified in the Pressure Equipment Directive and are CE marked.

REG-SA and REG-SB valves			
Nominal bore	DN = < 25 mm (1 in.)	DN32-80 mm (1¼ - 3 in.)	DN100 - 125 mm (4 - 5 in.)
Classified for	Fluid group I		
Category	Article 3, paragraph 3	II	III

Technical data

- *Refrigerants*
  Applicable to HCFC, HFC, R717 (Ammonia), R744 (CO_2), Propane, Butane, Iso-Butane and Ethane. R717 Heat Pump and Propylene applications with replaced O-ring.
- *Temperature range*
  –60/+150°C (–76/+302°F)
- *Max working pressure*
  52 bar g (754 psi g)
- *Flow coefficients*
  Flow coefficients for fully opened valves from k_v = 0.15 to 80 m^3/h (C_v = 0.17 to 92.5 USgal/min).

© Danfoss | DCS (ms) | 2020.05

Computation and selection

Introduction
In refrigeration plants, hand operated regulating valves are primarily used in liquid lines in order to regulate the flow of refrigerant. The valves can, however, also be used as expansion valves. From a calculation point of view the two fields of application are very different.

Normal flow is the term used to describe the general case where the flow through the valve is proportional to the square root of the pressure drop across it and inversely proportional to the density of the refrigerant (Bernouillis equation).

This relationship between mass flow, pressure drop and density satisfies the majority of all valve applications with refrigerants and brines.

Normal flow is characterised by turbulent flow through the valve without any phase change. The following capacity curves are based on the above mentioned assumption.

Application of the hand operated regulating valves outside the normal flow area will reduce the capacity of the valve considerably. In such cases it is recommended to use Coolselector®2 (Danfoss calculation and selection software).

Location of valve in system (marked with grey)

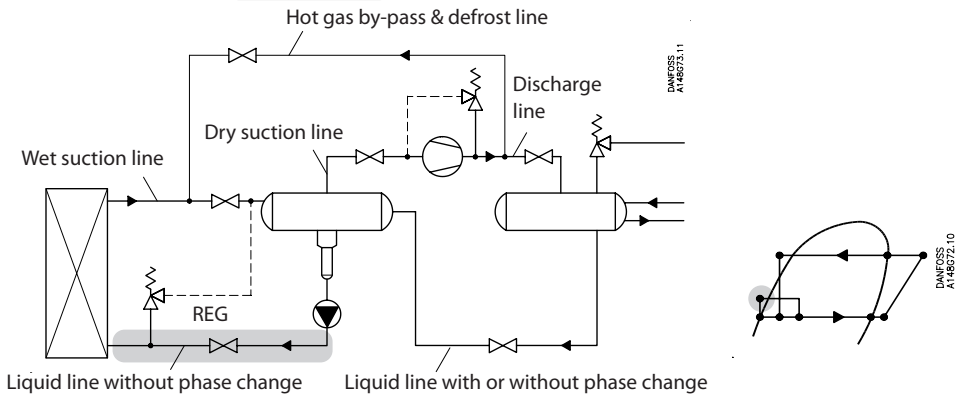

Sizing hand operated regulating valve for liquid flow
Liquid refrigerants: Use the liquid tables, fig. 6 - 10. For other refrigerants and brines, "Normal flow" (Turbulent flow); see below and use the flow coefficient tables (fig. 1 - 5).

SI-units

Mass flow:

$$k_v = \frac{G}{\sqrt{\rho \times 1000 \times \Delta p}} = G \times C_A \, [m^3/h]$$

Volume flow:

$$k_v = \frac{\dot{V}}{\sqrt{\frac{1000 \times \Delta p}{\rho}}} \, [m^3/h]$$

Imperial units

Mass flow:

$$C_v = \frac{0.95 \times G}{\sqrt{\rho \times \Delta p}} = 31.6 \times G \times C_A \, [USgal/min.]$$

Volume flow:

$$C_v = \frac{0.127 \times \dot{V}}{\sqrt{\frac{\Delta p}{\rho}}} \, [USgal/min.]$$

k_v	[m³/h]	Quantity [m³/h] of water flowing through a valve at a pressure loss of 1 bar (according to VDE/VDI Norm 2173).
P_1	[bar]	Pressure before the valve (upstream).
P_2	[bar]	Pressure after the valve (downstream).
Δp	[bar]	Actual pressure loss across the valve (P_1–P_2).
G	[kg/h]	Mass flow through the valve.
$\dot{V}$	[m³/h]	Volume flow through the valve.
ρ	[kg/m³]	Density of the refrigerant before the valve.
C_A		Calculation factor (fig. 11).

C_v	[US gal/min]	Quantity [US gal/min] of water flowing through a valve at a pressure loss of 1 psi.
P_1	[psi]	Pressure before the valve (upstream).
P_2	[psi]	Pressure after the valve (downstream).
Δp	[psi]	Actual pressure loss across the valve (P_1–P_2).
G	[lb/min]	Mass flow through the valve.
$\dot{V}$	[US gal/min]	Volume flow through the valve.
ρ	[lb/ft³]	Density of the refrigerant before the valve
C_A		Calculation factor (fig. 11).

Computation and selection

Flow coefficient

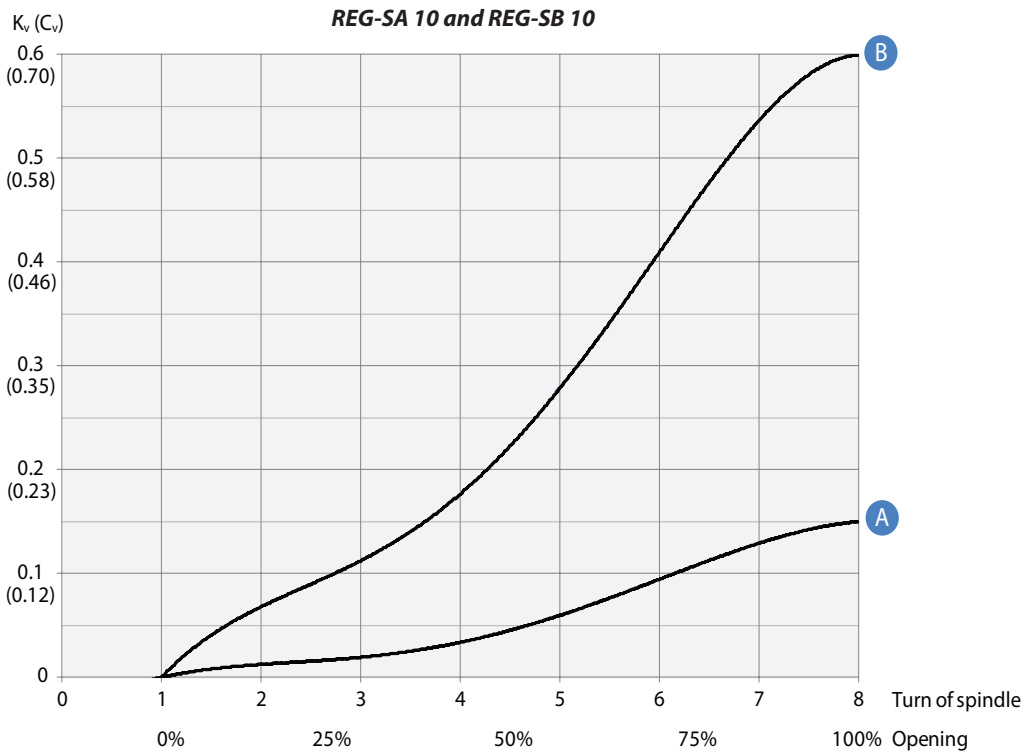

Fig. 1

Flow coefficient

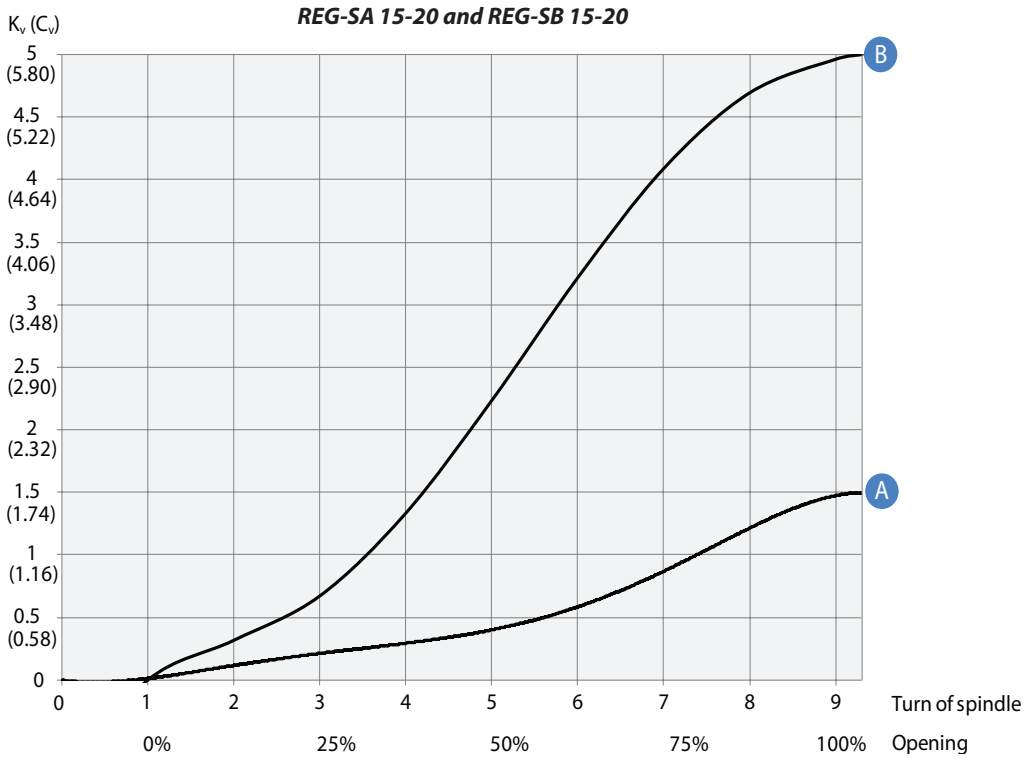

Fig. 2

© Danfoss | DCS (ms) | 2020.05

Computation and selection *(Continued)*

Flow coefficient

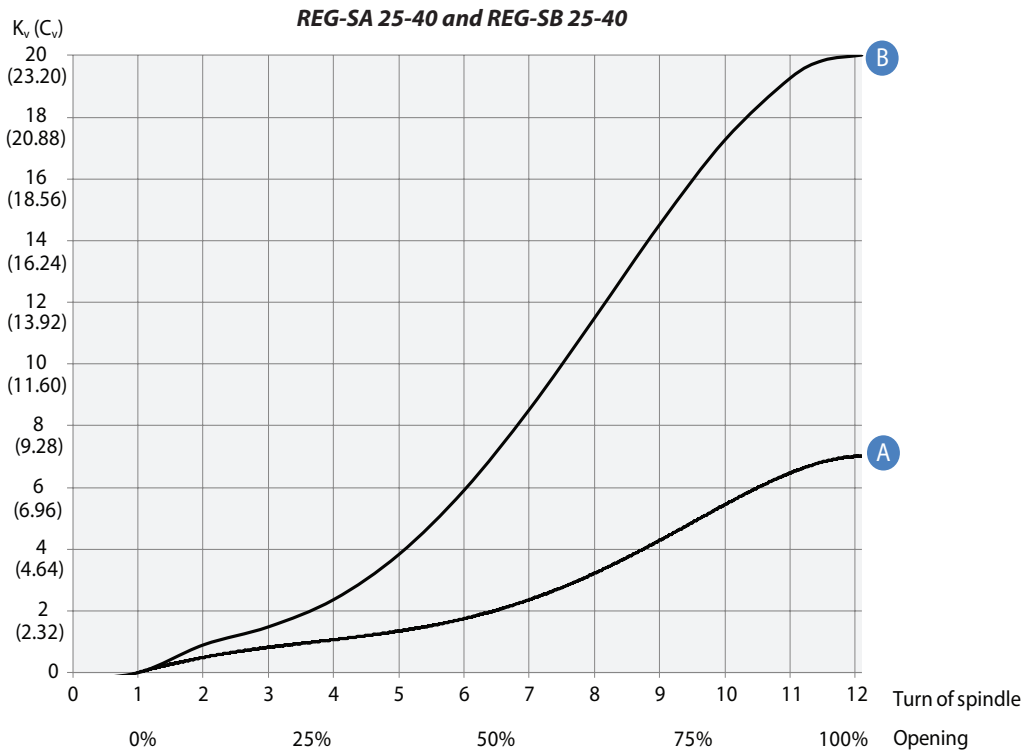

Fig. 3

Flow coefficient

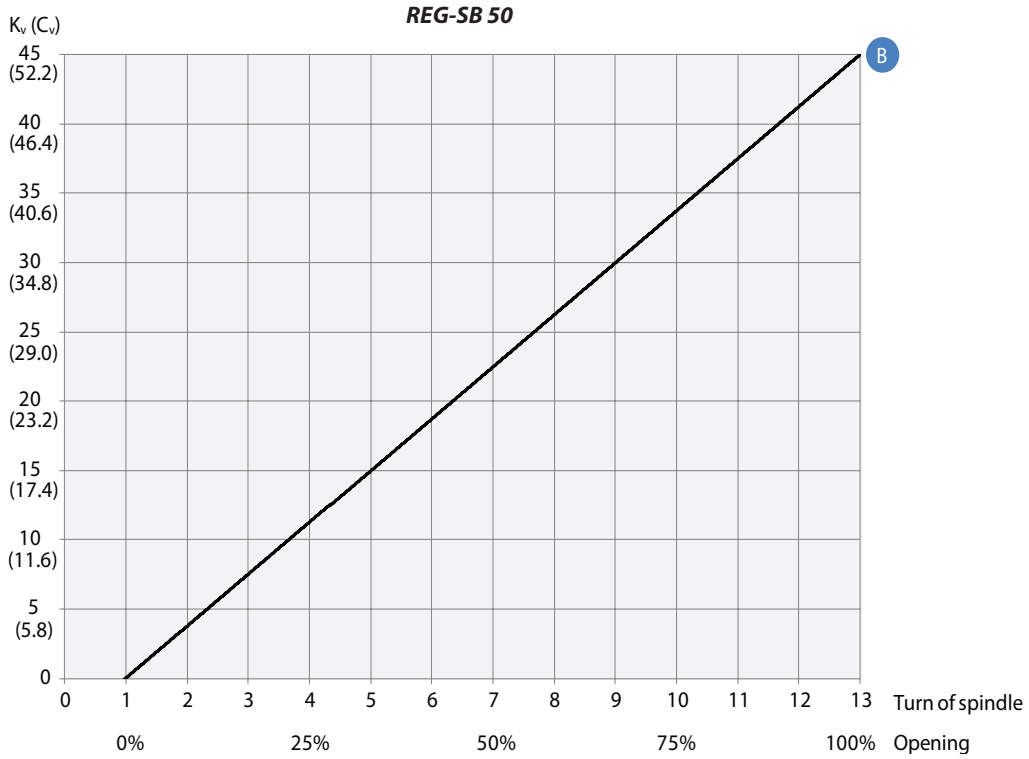

Fig. 4

Computation and selection *(Continued)*

Flow coefficient

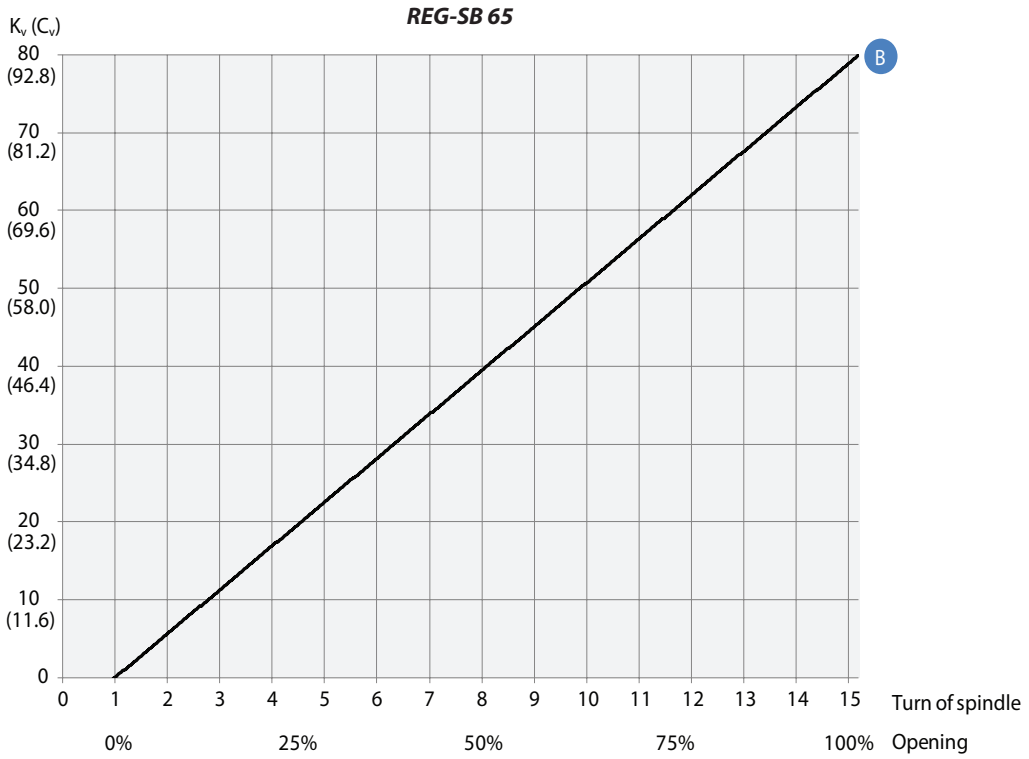

Fig. 5

© Danfoss | DCS (ms) | 2020.05

Computation and selection
(Continued)

Liquid R 717, density: 670 kg/m³ [42 lb/ft³]

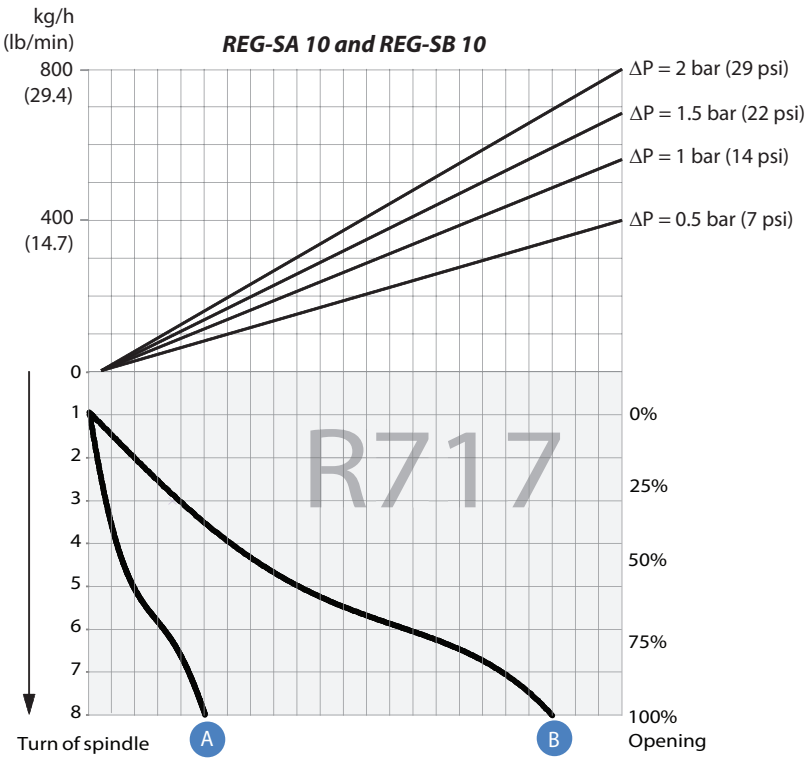

Fig. 6

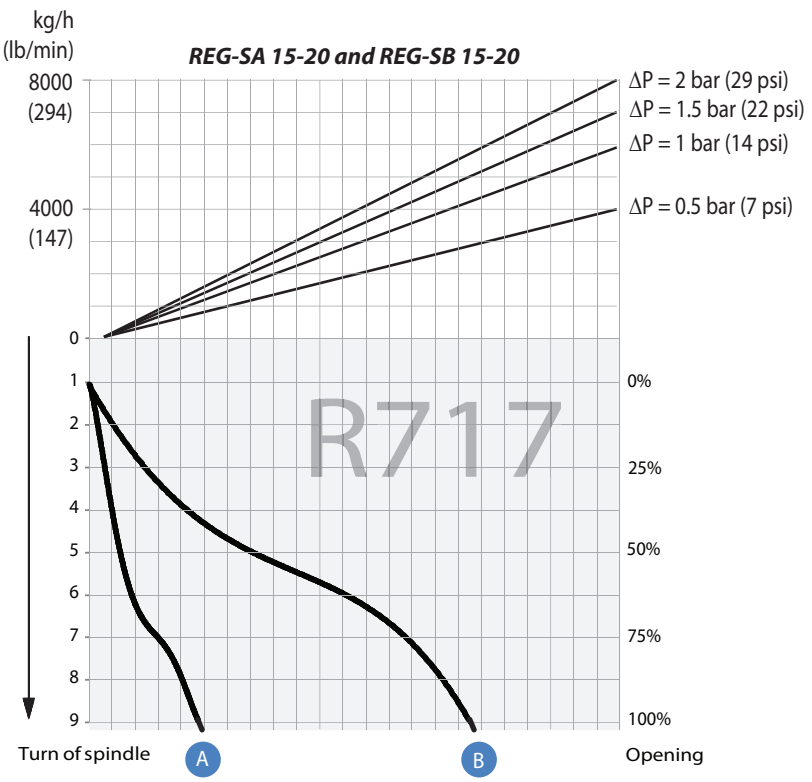

Fig. 7

For choice of valve size and connection see "Connections".

Computation and selection
(Continued)

Liquid R 717, density: 670 kg/m³ [42 lb/ft³]

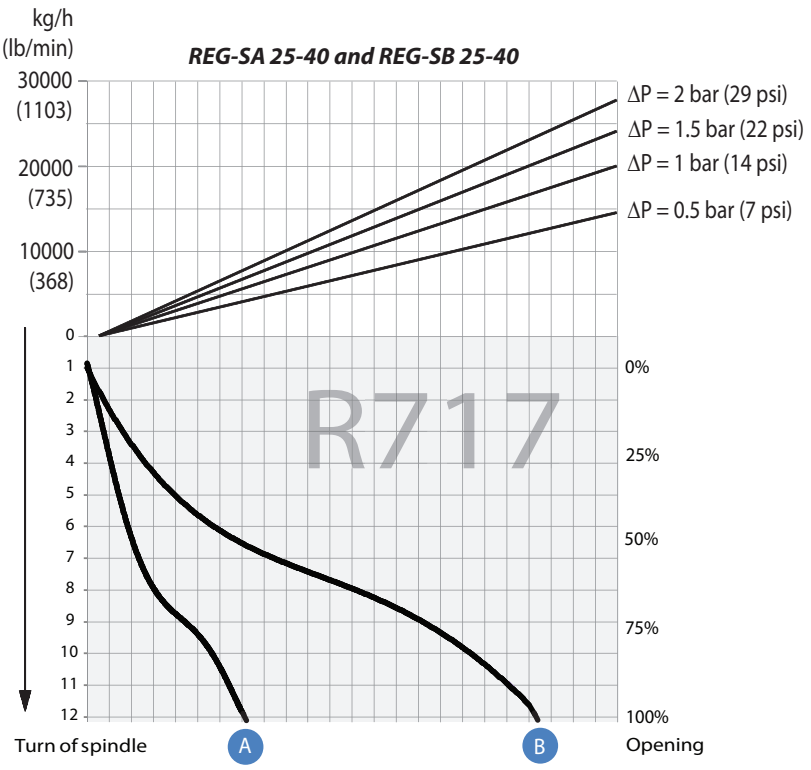

Fig. 8

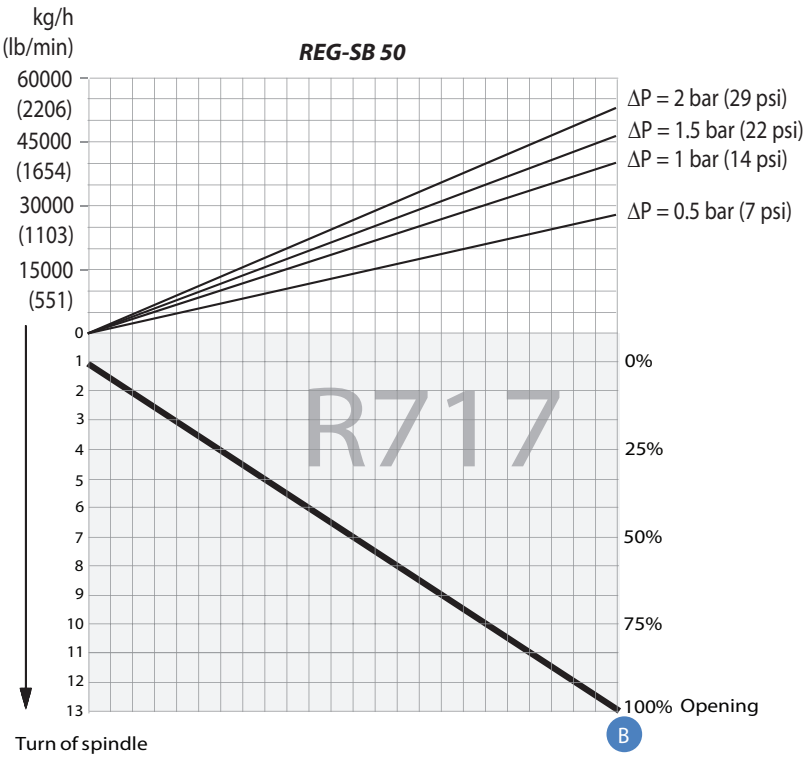

Fig. 9

For choice of valve size and connection see "Connections".

© Danfoss | DCS (ms) | 2020.05

Computation and selection
(Continued)

Liquid R 717, density: 670 kg/m³ [42 lb/ft³]

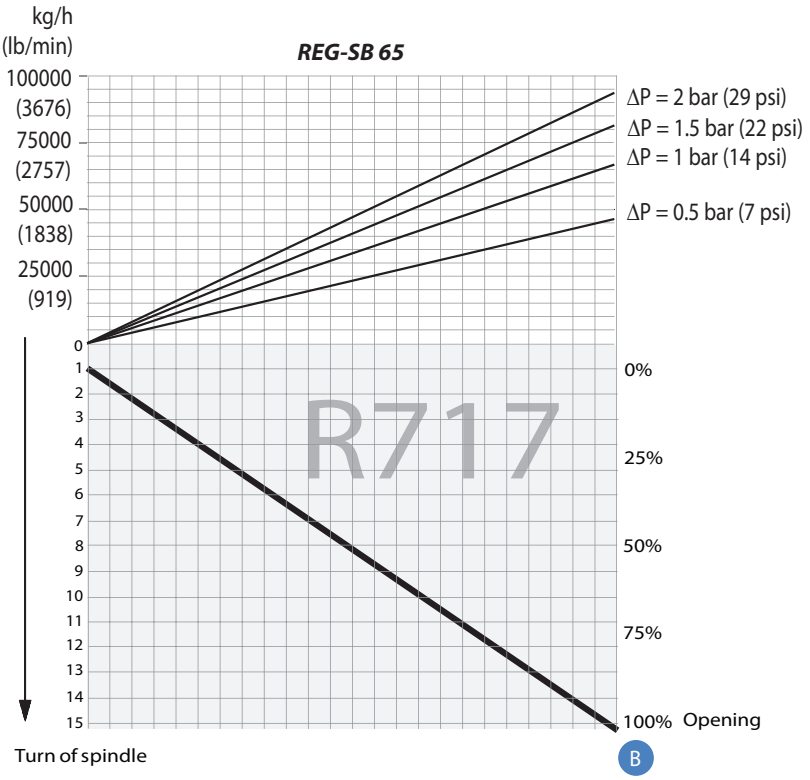

Fig. 10

Calculation factor C_A

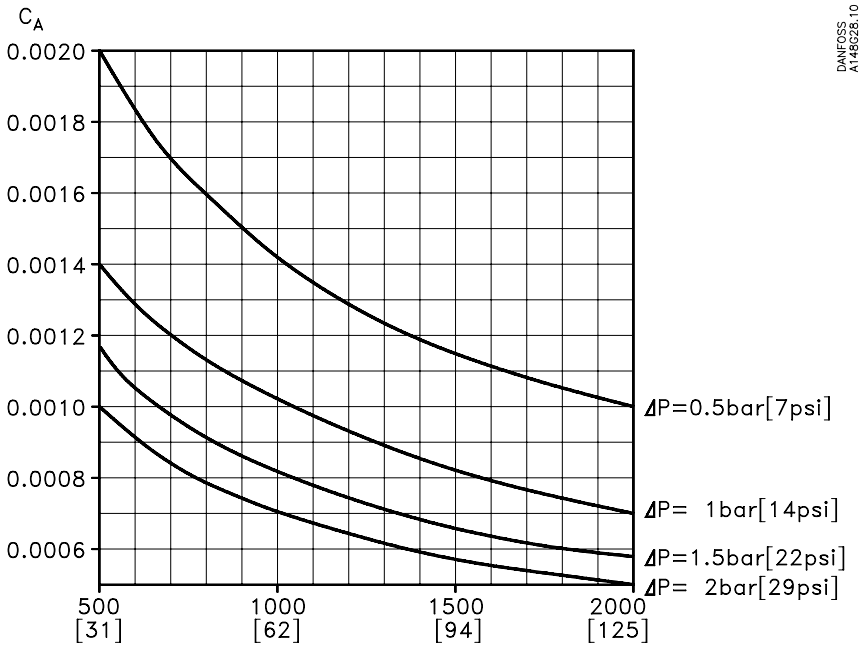

Fig. 11

For choice of valve size and connection see "Connections".

Computation and selection
Example 1.

Refrigerant: R 717
Refrigerant flow: 2200 kg/h
Pressure drop: $\Delta p = 0.5$ bar

The above mentioned example is illustrated on the following flow rate diagram and shows that REG-SB 15 and 20 with cone B can be used. The main rule is that nominal regulation range should be below 85% opening degree. If the arrowline is crossing 2 cone curves, the smaller cone should be selected if opening degree < 85%.

The example is only correct if the density of the refrigerant is approx. 670 (kg/m³), and there must be no build-up of flash gas in the valve.

Flow rate diagram

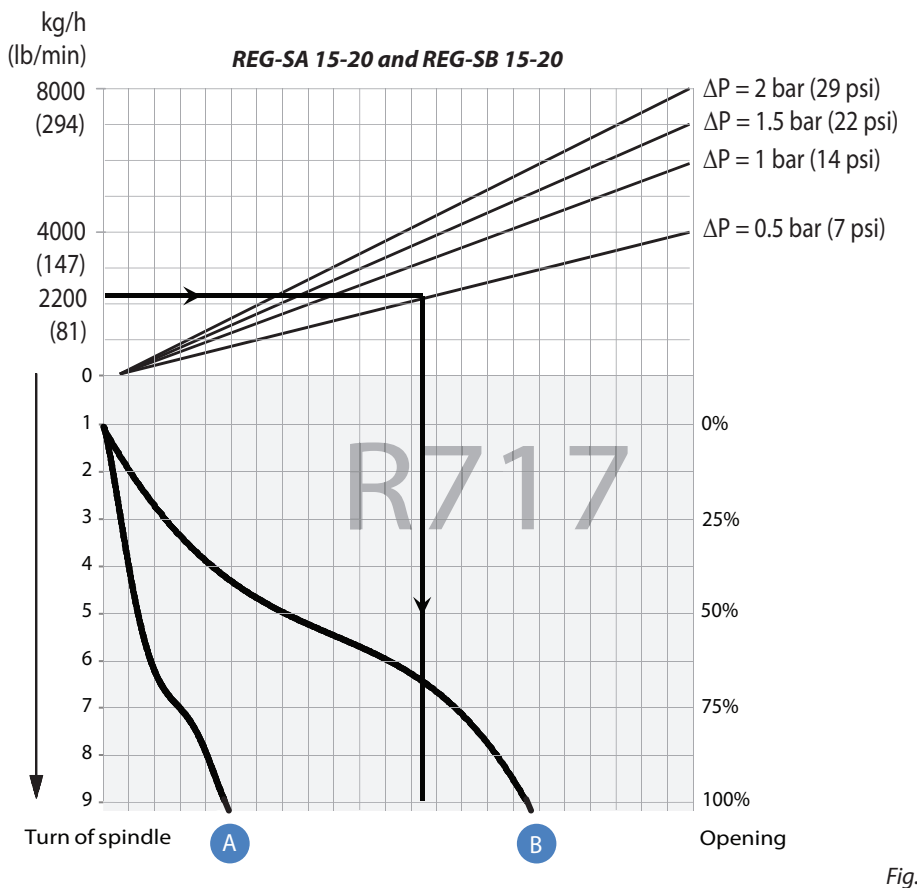

Fig. 12

© Danfoss | DCS (ms) | 2020.05

Computation and selection
Example 2.

Brine, density	ρ:	1150	[kg/m³]
Brine flow	G:	2,700	[kg/h]
Pressure drop	Δp:	0.5	[bar]

In this example it is not possible to use the selection diagrams (fig. 6 - 10) as the refrigerant in question is not included.

Use the curves of the k_v-values instead (fig. 1 - 5) and calculate the required k_v by means of the formulas in the "Introduction" passage at the beginning of this chapter. Alternatively calculate the k_v-values by means of the calculation factor C_A (fig. 13) and the flow rate diagram (in this example: fig. 14) as per the following calculation example.

Calculation example:

Required k_v-value
C_A = 0.00132 (from fig. 18)
k_v = $C_A \times G$
k_v = 0.00132 × 2,700 [kg/h]
= 3.56 [m³/h]

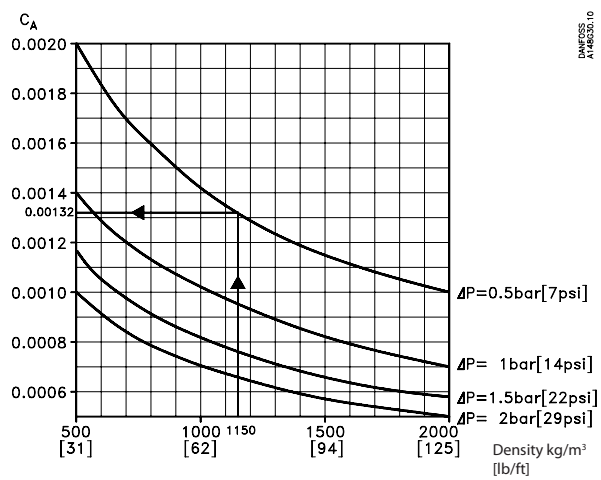

Fig. 13

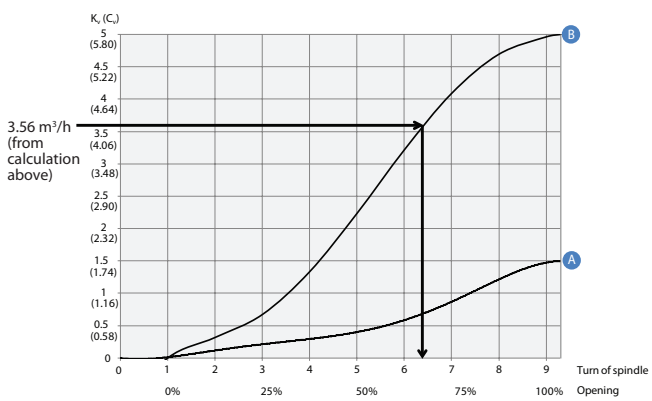

Fig. 14

REG-SB 15 and REG-SB 20 with cone B can be used.

Material specification

REG-SA and REG-SB 10

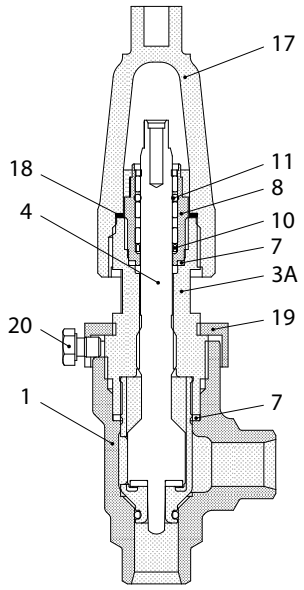

REG-SA and REG-SB 15 - 40

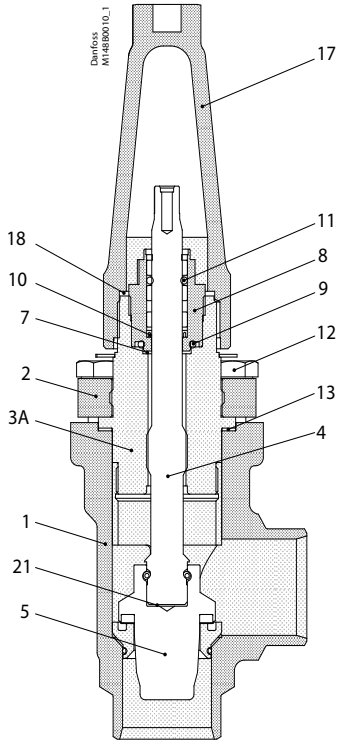

REG-SA and REG-SB 50 - 65

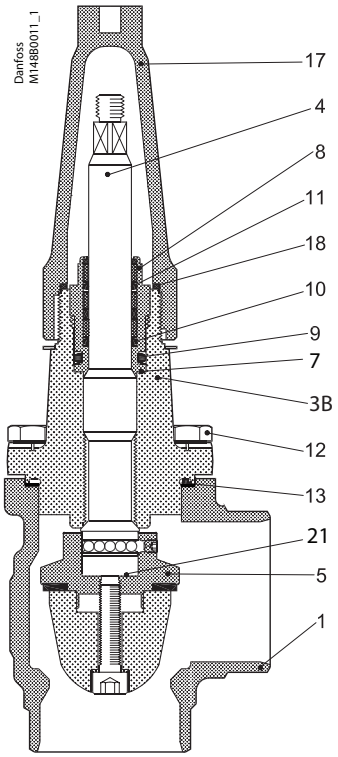

No.	Part	Material	EN	ISO	ASTM
1	Housing	Steel	G20Mn5QT, 10213-3 ---------- P285QH+QT, 10222-4		LCC, A352 ---------- LF2, A350
2	DN 15 - 40 (½ - 1½ in.) – Bonnet, Flange	Steel	P275 NL EN10028-3		A A662
3A	DN 10 - 40 ($^3/_8$ - 1½ in.) – Bonnet, Insert	Steel	11SMn30 10087	Type 2, R 683-9	1213 SAE J403
3B	DN 50 - 65 (2 - 2½ in.) – Bonnet, Flange	Steel	P285QH+QT 10222-4		LF2 A350
4	Spindle DN 10 - 65 (¼ - 2½ in.)	Stainless steel	X8CrNiS 18-9, 17440	Type 17, 683/13	AISI 303
5	Cone	Steel			
7	Packing washer	Aluminium			
8	Packing gland	Stainless Steel	X8CrNiS 18-9, 10088	Type 17, 683/13	AISI 303
9	O-ring	Cloroprene (Neoprene)			
10	Spring loaded Teflon ring	PTFE			
11	O-ring	Cloroprene (Neoprene)			
12	Bolts	Stainless steel	A2-70	A2-70	Type 308
13	Gasket	Fiber, non asbestos			
14	Bottom insert	Steel			
17	Seal cap	Aluminium			
18	Gasket f. seal cap	Nylon			
19	Locking nut	Steel			
20	Screw	Steel			
21	Disk spring	Steel			

© Danfoss | DCS (ms) | 2020.05

Connections

ANSI

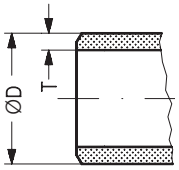

Butt-weld ANSI (B 36.10 Schedule 80)

REG-SA / SB	10	3/8	17.2	3.2	0.677	0.126	A and B
REG-SA / SB	15 2	1/2 3/4	21.3 26.9	3.7 4.0	0.839 1.059	0.146 0.158	A and B
REG-SA / SB	25 32 40	1 1 1/4 1 1/2	33.7 42.4 48.3	4.6 4.9 5.1	1.327 1.669 1.902	0.181 0.193 0.201	A and B

Butt-weld ANSI (B 36.10 Schedule 40)

REG-SB	50	2	60.3	3.9	2.37	0.15	B
REG-SB	65	2 1/2	73.0	5.2	2.87	0.20	B

SOC

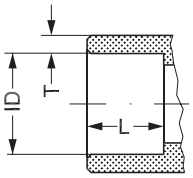

Socket welding ANSI (B 16.11)

	Size mm	Size in.	ID mm	T mm	ID in.	T in.	L mm	L in.	Cone
REG-SA / SB	15 20	1/2 3/4	21.8 27.2	6.0 7.6	0.858 1.071	0.235 0.299	10 13	0.39 0.51	A and B
REG-SA / SB	25 32 40	1 1 1/4 1 1/2	33.9 42.7 48.8	7.2 6.1 6.6	1.335 1.743 1.921	0.284 0.240 0.260	13 13 13	0.51 0.51 0.51	A and B
REG-SB	50	2	61.2	6.2	2.41	0.24	16	0.63	B

FPT

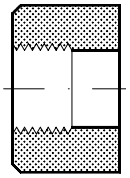

FPT inside pipe thread, NPT (ANSI/ASME B 1.20.1)

	Size mm	Size in.	Inside pipe thread	Cone
REG-SA / SB	15 20	1/2 3/4	(1/2 × 14 NPT) (3/4 × 14 NPT)	A and B
REG-SA / SB	25 32	1 1 1/4	(1 × 11.5 NPT) (1 1/4 × 11.5 NPT)	A and B

Dimensions and weights

REG-SA and REG-SB 10 - 65 in angleway version

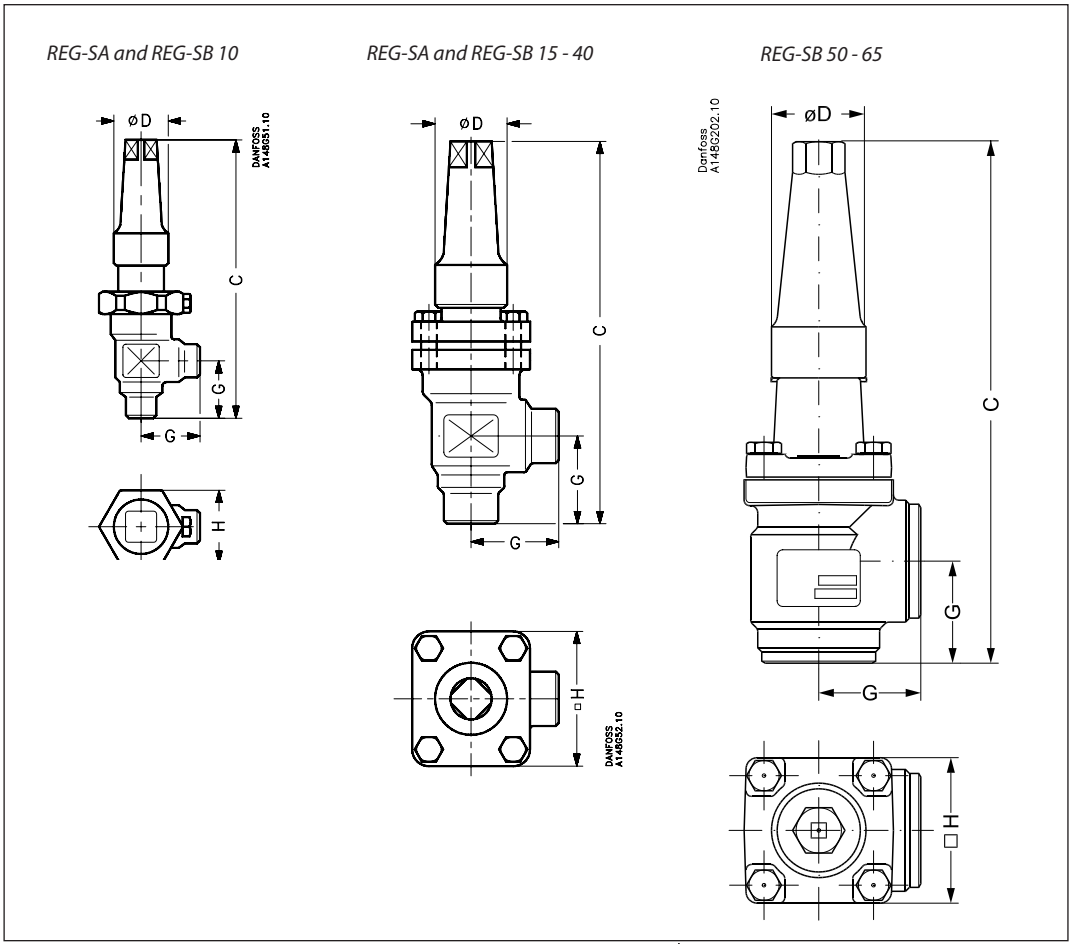

Valve size			C		G		∅D		□H		Weight
REG-SA/SB 10	mm		139		30		30		36		0.8 kg
REG-SA/SB (3/8)	in.		5.47		1.18		1.18		1.42		1.8 lb
REG-SA/SB 15-20	mm		182		45		38		60		1.4 kg
REG-SA/SB (½-3/4)	in.		7.17		1.77		1.50		2.36		3.1 lb
REG-SA/SB 25-40	mm		237		55		50		70		2.4 kg
REG-SA/SB (1-1½)	in.		9.33		2.17		1.97		2.76		5.3 lb
REG-SB 50	mm		315		60		50		77		3.2 kg
REG-SB (2 in.)	in.		12.4		2.36		1.97		3.03		7.1 lb
REG-SB 65	mm		335		70		50		90		4.8 kg
REG-SB (2½ in.)	in.		13.19		2.76		1.97		3.54		10.6 lb
REG-SA/SB 32 SOC	mm		275		62		50		70		2.9 kg
REG-SA/SB (1¼ in.) SOC	in.		10.83		2.44		1.97		2.76		6.4 lb
REG-SA/SB 40 SOC	mm		275		62		50		70		2.9 kg
REG-SA/SB (1½ in.) SOC	in.		10.83		2.44		1.97		2.76		6.4 lb
REG-SB 50 SOC	mm.		320		65		50		77		4.1 kg
REG-SB (2 in.) SOC	in.		12.60		2.56		1.97		3.03		9.0 lb

Specified weights are approximate values only.

© Danfoss | DCS (ms) | 2020.05

Dimensions and weights
(cont.)

REG-SA and REG-SB 10 - 65 in straightway version

REG-SA and REG-SB 10

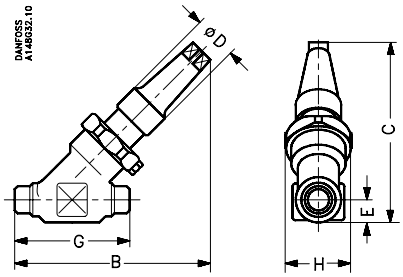

REG-SA and REG-SB 15 - 40

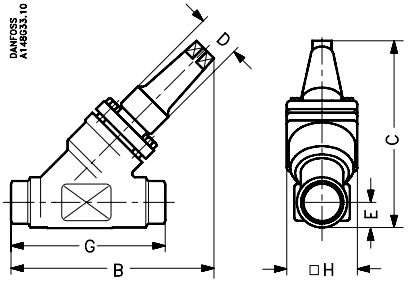

REG-SB 50-65

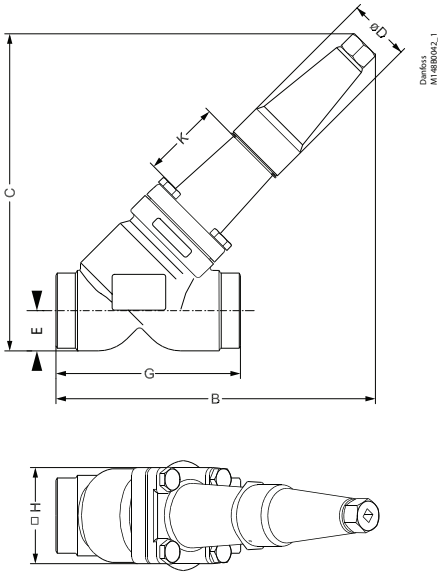

Valve size		C	B	E	G		∅D		□H		Weight
REG-SA/SB 10	mm	110	120	13	70		30		36		0.8 kg
REG-SA/SB (3/8)	in.	4.33	4.72	0.51	2.76		1.18		1.42		1.8 lb
REG-SA/SB 15-20	mm	145	155	20	120		38		60		2.0 kg
REG-SA/SB (½-3/4)	in.	5.71	6.10	0.79	4.72		1.50		2.36		4.4 lb
REG-SA/SB 25-40	mm	200	215	26	155		50		70		3.0 kg
REG-SA/SB (1-1½)	in.	7.87	8.46	1.02	6.10		1.97		2.76		6.6 lb
REG-SB 50	mm	257	250	32	148		50		77		4.2 kg
REG-SB (2 in.)	in.	10.12	10.20	1.26	5.83		1.97		3.03		9.3 lb
REG-SB 65	mm	280	284	40	176		50		90		6.3 kg
REG-SB (2½ in.)	in.	11.02	11.18	1.57	6.93		1.97		3.54		13.9 lb
REG 32 SOC	mm	209	222	27.4	155		50		70		3.0 kg
REG (1¼) SOC	in.	8.23	8.74	1.08	6.10		1.97		2.76		6.6 lb
REG 40 SOC	mm	213	222	31.0	155		50		70		3.0 kg
REG (1½) SOC	in.	8.39	8.74	1.22	6.10		1.97		2.76		6.6 lb
REG-SB 50 SOC	mm	261	266	37	162		50		77		5.1 kg
REG-SB (2 in.) SOC	in.	10.28	10.47	1.26	6.38		6.38		3.03		11.2 lb

Specified weights are approximate values only.

Ordering

How to order
The table below is used to indentify the valve required.

Please note that the type codes only serve to identify the valves, some of which may not form part of the standard product range. For further information please contact your local Danfoss Sales Company.

Type codes

Valve type	**REG**	Hand operated regulating valves			
Nominal size in mm (Valve size measured on the connection diameter)			Available connection types		
			A	SOC	FPT
	10	DN 10	x		
	15	DN 15	x	x	x
	20	DN 20	x	x	x
	22	DN 22			
	25	DN 25	x	x	x
	32	DN 32	x	x	x
	40	DN 40	x	x	
	50	DN 50	x	x	
	65	DN 65	x		
Connections	**A**	Welding branches: ANSI B 36.10 schedule 80, 15 - 40 (½ - 1½ in.) Welding branches: ANSI B 36.10 schedule 40, 50 - 65 (2 - 2½ in.)			
	SOC	Socket weld: ANSI B 16.11			
	FPT	NPT inside pipe thread: ANSI/ASME B1.20.1			
Valve housing	**ANG**	Angle flow			
	STR	Straight flow			
Cone A	Size:	Flow area [mm²]			
	DN 10	3.02			
	DN 15	36.5			
	DN 20	36.5			
	DN 25	178			
	DN 32	178			
	DN 40	178			
Cone B	Size:	Flow area [mm²]			
	DN 10	16			
	DN 15	115			
	DN 20	115			
	DN 25	531			
	DN 32	531			
	DN 40	531			
	DN 50	822			
	DN 65	1978			

Available combination between valve size, cone type and valve connection

Size	**DN 10 (3/8")**		**DN 15 (½")**		**DN 20 (3/4")**		**DN 22 (7/8")**		**DN 25 (1")**		**DN 32 (1 1/4")**		**DN 40 (1½")**		**DN 50 (2")**		**DN 65 (2½")**	
Cone type	**A**	**B**	**A**	**B**	**A**	**B**	**A**	**B**	**A**	**B**	**A**	**B**	**A**	**B**	**A**	**B**	**A**	**B**
ANSI	×	×	×	×	×	×			×	×	×	×	×	×		×		×
SOC			×	×	×	×			×	×	×	×	×	×		×		
FPT			×	×	×	×			×	×	×	×						

× = **available**

© Danfoss | DCS (ms) | 2020.05

Ordering
(continued)

Important!
Where products need to be certified according to specific certification societies or where higher pressures are required, the relevant information should be included at the time of order.

Complete REG-SA (Cone type A)

Butt-weld ANSI (B 36.10 Schedule 80)

Size mm	Size in.	Type	Code no.
Angleway *- REG-SA with cone type A*			
10	3/8	REG-SA 10 A ANG	**148B5106**
15	1/2	REG-SA 15 A ANG	**148B5202**
20	3/4	REG-SA 20 A ANG	**148B5302**
25	1	REG-SA 25 A ANG	**148B5402**
32	1 1/4	REG-SA 32 A ANG	**148B5502**
40	1 1/2	REG-SA 40 A ANG	**148B5602**

Butt-weld ANSI (B 36.10 Schedule 80)

Size mm	Size in.	Type	Code no.
Straightway *- REG-SA with cone type A*			
10	3/8	REG-SA 10 A STR	**148B5116**
15	1/2	REG-SA 15 A STR	**148B5212**
20	3/4	REG-SA 20 A STR	**148B5312**
25	1	REG-SA 25 A STR	**148B5412**
32	1 1/4	REG-SA 32 A STR	**148B5512**
40	1 1/2	REG-SA 40 A STR	**148B5612**

Socket welding ANSI (B 16.11)

Size mm	Size in.	Type	Code no.
Angleway *- REG-SA with cone type A*			
15	1/2	REG-SA 15 SOC ANG	**148B5204**
20	3/4	REG-SA 20 SOC ANG	**148B5304**
25	1	REG-SA 25 SOC ANG	**148B5404**
32	1 1/4	REG-SA 32 SOC ANG	**148B5504**
40	1 1/2	REG-SA 40 SOC ANG	**148B5604**

Socket welding ANSI (B 16.11)

Size mm	Size in.	Type	Code no.
Straightway *- REG-SA with cone type A*			
15	1/2	REG-SA 15 SOC STR	**148B5214**
20	3/4	REG-SA 20 SOC STR	**148B5314**
25	1	REG-SA 25 SOC STR	**148B5414**
32	1 1/4	REG-SA 32 SOC STR	**148B5514**
40	1 1/2	REG-SA 40 SOC STR	**148B5614**

FPT inside pipe thread, NPT (ANSI/ASME B 1.20.1)

Size mm	Size in.	Type	Code no.
Angleway *- REG-SA with cone type A*			
15	1/2	REG-SA 15 FTP ANG	**148B5206**
20	3/4	REG-SA 20 FTP ANG	**148B5306**
25	1	REG-SA 25 FTP ANG	**148B5406**
32	1 1/4	REG-SA 32 FTP ANG	**148B5506**

FPT inside pipe thread, NPT (ANSI/ASME B 1.20.1)

Size mm	Size in.	Type	Code no.
Straightway *- REG-SA with cone type A*			
15	1/2	REG-SA 15 FTP STR	**148B5216**
20	3/4	REG-SA 20 FTP STR	**148B5316**
25	1	REG-SA 25 FTP STR	**148B5416**
32	1 1/4	REG-SA 32 FTP STR	**148B5516**

A = Butt-weld ANSI
SOC = Socket weld
FPT = Inside pipe thread

ANG = Angleway
STR = Straightway

Ordering
(continued)

Important!
Where products need to be certified according to specific certification societies or where higher pressures are required, the relevant information should be included at the time of order.

Complete REG-SB (Cone type B)

Butt-weld ANSI (B 36.10 Schedule 80)

Size mm	Size in.	Type	Code no.
Angleway *- REG-SB with cone type B*			
10	3/8	REG-SB 10 A ANG	**148B5107**
15	1/2	REG-SB 15 A ANG	**148B5203**
20	3/4	REG-SB 20 A ANG	**148B5303**
25	1	REG-SB 25 A ANG	**148B5403**
32	1 1/4	REG-SB 32 A ANG	**148B5503**
40	1 1/2	REG-SB 40 A ANG	**148B5603**

Butt-weld ANSI (B 36.10 Schedule 80)

Size mm	Size in.	Type	Code no.
Straightway *- REG-SB with cone type B*			
10	3/8	REG-SB 10 A STR	**148B5117**
15	1/2	REG-SB 15 A STR	**148B5213**
20	3/4	REG-SB 20 A STR	**148B5313**
25	1	REG-SB 25 A STR	**148B5413**
32	1 1/4	REG-SB 32 A STR	**148B5513**
40	1 1/2	REG-SB 40 A STR	**148B5613**

Butt-weld ANSI (B 36.10 Schedule 40)

Size mm	Size in.	Type	Code no.
Angleway *- REG-SB with cone type B*			
50	2	REG-SB 50 A ANG	**148B5706**
65	2 1/2	REG-SB 65 A ANG	**148B5806**

Butt-weld ANSI (B 36.10 Schedule 40)

Size mm	Size in.	Type	Code no.
Straightway *- REG-SB with cone type B*			
50	2	REG-SB 50 A STR	**148B5724**
65	2 1/2	REG-SB 65 A STR	**148B5809**

Socket welding ANSI (B 16.11)

Size mm	Size in.	Type	Code no.
Angleway *- REG-SB with cone type B*			
15	1/2	REG-SB 15 SOC ANG	**148B5205**
20	3/4	REG-SB 20 SOC ANG	**148B5305**
25	1	REG-SB 25 SOC ANG	**148B5405**
32	1 1/4	REG-SB 32 SOC ANG	**148B5505**
40	1 1/2	REG-SB 40 SOC ANG	**148B5605**
50	2	REG-SB 50 SOC ANG	**148B5727**

Socket welding ANSI (B 16.11)

Size mm	Size in.	Type	Code no.
Straightway *- REG-SB with cone type B*			
15	1/2	REG-SB 15 SOC STR	**148B5215**
20	3/4	REG-SB 20 SOC STR	**148B5315**
25	1	REG-SB 25 SOC STR	**148B5415**
32	1 1/4	REG-SB 32 SOC STR	**148B5515**
40	1 1/2	REG-SB 40 SOC STR	**148B5615**
50	2	REG-SB 50 SOC STR	**148B5725**

FPT inside pipe thread, NPT (ANSI/ASME B 1.20.1)

Size mm	Size in.	Type	Code no.
Angleway *- REG-SB with cone type B*			
15	1/2	REG-SB 15 FTP ANG	**148B5207**
20	3/4	REG-SB 20 FTP ANG	**148B5307**
25	1	REG-SB 25 FTP ANG	**148B5407**
32	1 1/4	REG-SB 32 FTP ANG	**148B5507**

FPT inside pipe thread, NPT (ANSI/ASME B 1.20.1)

Size mm	Size in.	Type	Code no.
Straightway *- REG-SB with cone type B*			
15	1/2	REG-SB 15 FTP STR	**148B5217**
20	3/4	REG-SB 20 FTP STR	**148B5317**
25	1	REG-SB 25 FTP STR	**148B5417**
32	1 1/4	REG-SB 32 FTP STR	**148B5517**

A = Butt-weld ANSI
SOC = Socket weld
FPT = Inside pipe thread

ANG = Angleway
STR = Straightway

© Danfoss | DCS (ms) | 2020.05

Ordering REG-SA/SB from the parts programme

Example
(select from table 1 and 2)

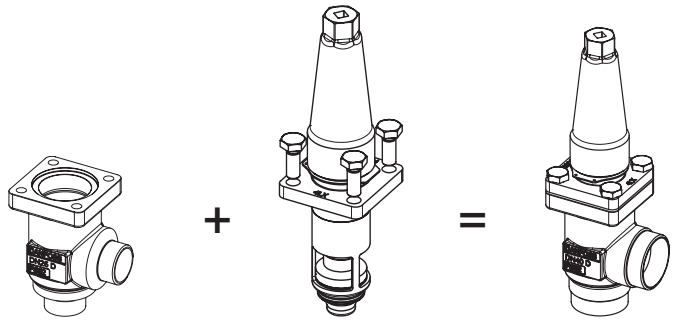

Valve housing, size 25 (1 in.), ANSI butt weld, angleway, **148B5454**
Table 1

Top part, REG-SA size 25 (1 in.) **148B5480**
Table 2

Table 1
SVL valve housings w/different connections

	DN 10 mm (3/8 in.)		*DN 15-65 mm (½ - 2½ in.)*			
	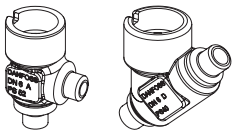		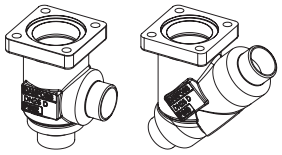			
Sizes [DN]	**Valve Housing SVL**					
	ANSI-Butt weld		**SOC**		**FPT**	
mm / **in.**	**ANG**	**STR**	**ANG**	**STR**	**ANG**	**STR**
10 / 3/8	**148B5124**	**148B5125**				
15 / ½	**148B5254**	**148B5255**	**148B5256**	**148B5257**	**148B5258**	**148B5259**
20 / ¾	**148B5354**	**148B5355**	**148B5356**	**148B5357**	**148B5358**	**148B5359**
25 / 1	**148B5454**	**148B5455**	**148B5456**	**148B5457**	**148B5458**	**148B5459**
32 / 1¼	**148B5578**	**148B5579**	**148B5580**	**148B5581**	**148B5582**	**148B5583**
40 / 1½	**148B5654**	**148B5655**	**148B5656**	**148B5657**		
50 / 2	**148B5743**	**148B5744**	**148B5745**	**148B5746**		
65 / 2½	**148B5818**	**148B5819**	**148B5816**	**148B5817**		

Table 2
REG complete top part including gaskets and bolts

	REG-SA/SB 10	REG-SA/SB 15-65	REG-LA/LB 15-40
	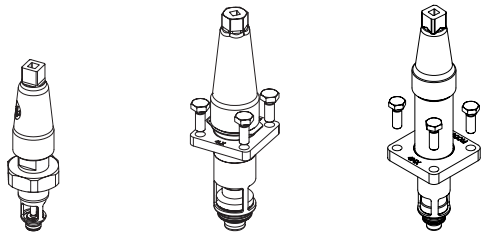		
Sizes [DN]	**Complete top part**		
mm / **in.**	**REG-SA**	**REG-SB**	**REG-LA** / **REG-LB**
10 / 3/8	**148B5112**	**148B5113**	
15 / ½	**148B5280**	**148B5281**	**148B6401** / **148B6402**
20 / ¾			
25 / 1	**148B5480**	**148B5481**	**148B6403** / **148B6404**
32 / 1¼			
40 / 1½			
50 / 2		**148B5734**	
65 / 2½		**148B5824**	

Replacement kit (O-ring replacement) for R717 Ammonia Heat Pump and Propylene applications (including ID tag)*

Size (DN)		**O-ring kit for**	
mm	**in.**	**R717 Heat pump**	**R1270 Propylene**
10	3/8	**148B6084**	**148B6085**
15	½	**148B6070**	**148B6077**
20	¾		
25	1	**148B6096**	**148B6097**
32	1¼		
40	1½		

* Replacement kits for R717 Ammonia Heat Pump is applicable for continuous operating temperature between +100 °C to 150 °C (212 °F to 302 °F)

Danfoss can accept no responsibility for possible errors in catalogues, brochures and other printed material. Danfoss reserves the right to alter its products without notice. This also applies to products already on order provided that such alterations can be made without subsequential changes being necessary in specifications already agreed.
All trademarks in this material are property of the respective companies. Danfoss and the Danfoss logotype are trademarks of Danfoss A/S. All rights reserved.