**Phillips®**
**REFRIGERATION**
*VALVES • VESSELS • SYSTEMS • CONTROLS*

# FLANGES & UNIONS
# BULLETIN FLUN-16E-01
# Engineering Data

**Available Sizes: 1/2” to 10”**
**For Ammonia (R717) and Halocarbon Refrigerants**

## Features

- Forged A105 Steel
- 300 PSI Rating, -50°F to +400°F↗,⌘
- Tongue & Groove Flange Facings
- Available with Threaded, Socket Weld, Weld Neck (AKA Butt Weld), and ODC/ ODS Connections
- CRN 0B11183.5C

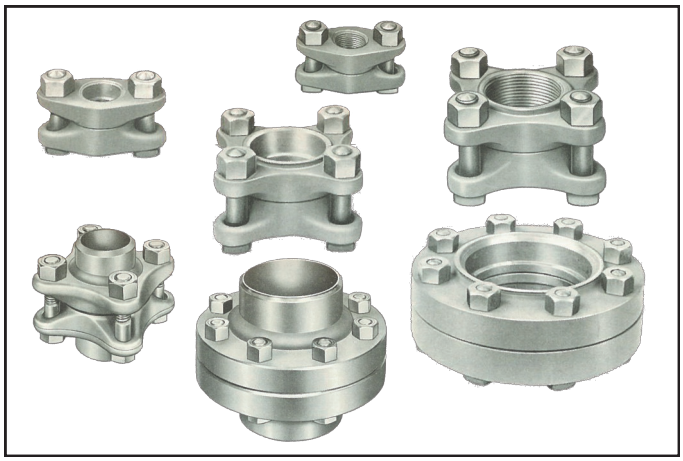

## FLANGE, UNION, AND SPARE PART NUMBERS

| Style of Flange | Nom. Pipe Size (in.) | Flange Part Numbers (M=Male, F=Female) | | | Union** Part Numbers | | | Replacement Parts | | | |
|---|---|---|---|---|---|---|---|---|---|---|---|
| | | Socket | Threaded | Weld Neck | Socket | Threaded | Weld Neck | Gasket Part # | Nut Part # | Bolt Part # | Kit Part # *** |
| Oval 2-Bolt | 1/2 | 4-MS, 4-FS | 4-MT, 4-FT | --- | U-4S | U-4T | --- | 728 | 58 | 72 | KF075 |
| | 3/4 | 6-MS, 6-FS | 6-MT, 6-FT | --- | U-6S | U-6T | --- | | | | |
| | 1 | 8-MSO, 8-FSO | 8-MTO, 8-FTO | --- | U-8SO | U-8TO | --- | 626 | 58 | 72 | KFO100 |
| Square 4-Bolt | 1 | 8-MS, 8-FS | 8-MT, 8-FT | --- | U-8S | U-8T | --- | 63 | 57 | 721B | KF125 |
| | 1-1/4 | 10-MS, 10-FS | 10-MT, 10-FT | 10-MW, 10-FW | U-10S | U-10T | U-10W | | | | |
| | 1-1/2 | 12-MS, 12-FS | 12-MT, 12-FT | 12-MW, 12-FW | U-12S | U-12T | U-12W | 63W | 57 | 721B | KF150 |
| | 2 | 16-MS, 16-FS | 16-MT, 16-FT | 16-MW, 16-FW | U-16S | U-16T | U-16W | 73 | 58 | 72 | KF200 |
| | 2-1/2 | 20-MS, 20-FS | --- | 20-MW, 20-FW | U-20S | --- | U-20W | 74 | 59 | 24A | KF250 |
| | 3 | 24-MS, 24-FS | --- | 24-MW, 24-FW | U-24S | --- | U-24W | 326Y | 59 | 24A | KF300 |
| | 4 | 32-MS, 32-FS | --- | 32-MW, 32-FW | U-32S | --- | U-32W | 326YA | 60 | 24D | KF400 |
| Round 8-Bolt | 5 | 40-MS, 40-FS | --- | 40-MW, 40-FW | U-40S | --- | U-40W | 5G | 59 | 24A | KF500 |
| | 5*,↗ | 40-MSY, 40-FSY | --- | 40-MWY | U-40SY | --- | --- | 5GY | 59 | 24A | KF500Y |
| | 6 | 48-MS, 48-FS | --- | 48-MW, 48-FW | U-48S | --- | U-48W | 6G | 59 | 24A | KF600 |
| | 6*,↗ | 48-MSY, 48-FSY | --- | 48-MWY | U-48SY | --- | --- | 6GY | 59 | 24A | KF600Y |
| | 8↗ | 64-MS, 64-FS | --- | 64-MW, 64-FW | U-64S | --- | U-64W | 8G | 60 | 24E | KF800 |
| 12-Bolt | 10⌘ | 80-MS, 80-FS | --- | 80-MW, 80-FW | U-80S | --- | U-80W | 10G | 60 | 24E | KF1000 |

* These flanges machined to York flange dimensions.
** Unions consist of (1) male flange & (1) female flange; plus all nuts, bolts, and gasket required to make (1) complete flange set.
*** Kits includes one gasket and the required number of nuts and bolts for that flange size.
↗ These 5", 6", and 8" flanges are rated for 300 PSI, -45 °F to +400 °F.
⌘ This 10" flange is rated for 300 PSI, -41 °F to +400 °F.

# SOCKET WELD FLANGE DIMENSIONS❖ AND WEIGHTS

| Style of Flange | Nominal Pipe Size (in.) | A Flange Dimension | B Bolt Center | C Flange Thickness | D | E | F | G Depth of Socket | Bolt Size | Flange Weight (lbs.) | Union Weight (lbs.) |
|---|---|---|---|---|---|---|---|---|---|---|---|
| | | | | | Tongue & Groove | | | | | | |
| | | | | | I.D. | O.D. | Depth** | | | | |
| Oval 2-Bolt | 1/2 | 4-3/8 | 3 | 15/16 | 1-1/4 | 1-7/8 | 1/8 | 7/16 | 5/8 | 1 | 3 |
| | 3/4 | 4-3/8 | 3 | 15/16 | 1-1/4 | 1-7/8 | 1/8 | 1/2 | 5/8 | 1 | 3 |
| | 1 | 4-3/8 | 3 | 15/16 | 1-3/8 | 1-7/8 | 1/8 | 1/2 | 5/8 | 1 | 3 |
| Square 4-Bolt | 1 | 3-1/2 | 2-3/8 | 1-1/16 | 1-3/4 | 2-3/8 | 1/8 | 9/16 | 1/2 | 2 | 5 |
| | 1-1/4 | 3-1/2 | 2-3/8 | 1-1/16 | 1-3/4 | 2-3/8 | 1/8 | 9/16 | 1/2 | 1.75 | 4.5 |
| | 1-1/2 | 4 | 2-3/4 | 1-1/8 | 2 | 2-3/4 | 1/8 | 5/8 | 1/2 | 2.25 | 5.5 |
| | 2 | 4-1/2 | 3-1/16 | 1-1/8 | 2-1/2 | 3-1/4 | 1/8 | 5/8 | 5/8 | 2.5 | 7 |
| | 2-1/2 | 5-1/2 | 3-7/8 | 1-1/2 | 3 | 3-3/4 | 1/8 | 1 | 3/4 | 5 | 12.5 |
| | 3 | 6 | 4-1/8 | 1-9/16 | 3-5/8 | 4-3/8 | 1/8 | 1-1/16 | 3/4 | 6 | 15 |
| | 4 | 7 | 5 | 1-7/8 | 4-3/4 | 5-1/2 | 1/8 | 1-3/8 | 7/8 | 9 | 22 |
| Round 8-Bolt | 5 | 10-1/4 | 8-1/2 | 1-3/4 | 6-1/8 | 7-1/4 | 1/8 | 1-1/4 | 3/4 | 20 | 47 |
| | 5* | 10-1/4 | 8-1/2 | 1-3/4 | 5-3/4 | 6-1/2 | 1/8 | 1-1/4 | 3/4 | 20 | 47 |
| | 6 | 11-1/4 | 9-1/2 | 1-13/16 | 7-1/8 | 8-1/4 | 1/8 | 1-5/16 | 3/4 | 24 | 55 |
| | 6* | 12-1/4 | 9-3/4 | 1-13/16 | 7 | 7-3/4 | 1/8 | 1-5/16 | 3/4 | 24 | 55 |
| | 8 | 14-1/4 | 12 | 2 | 9-3/8 | 10-1/2 | 3/16 | 1-1/2 | 7/8 | 40 | 90 |
| 12-Bolt | 10 | 16-1/2 | 14-3/8 | 2-1/4 | 11-3/8 | 12-5/8 | 3/16 | 1-3/4 | 7/8 | 60 | 135 |

All dimensions are in Inches (nominal dimensions).
* Machined to York flange dimensions
** Tongue dimension is 1/32" greater than groove dimension.

## Oval

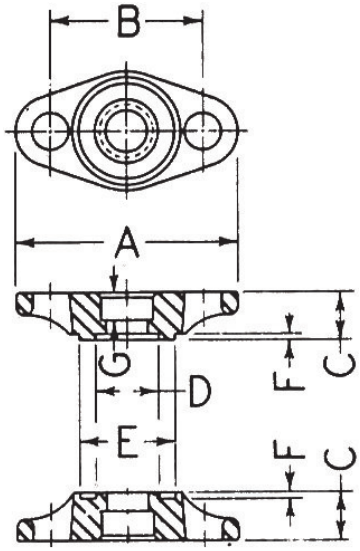


## Square

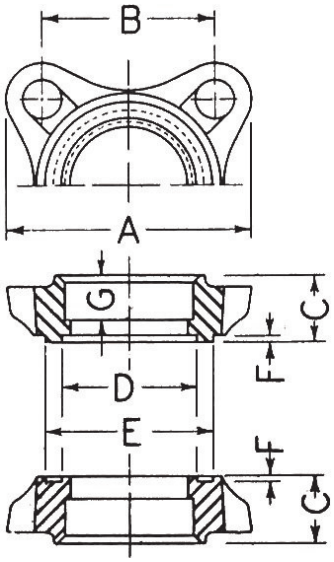


## Round

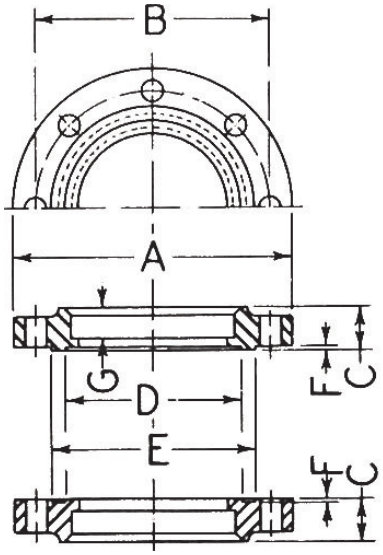


❖ Besides the flanges that are machined to York flange dimensions (denoted with a single star in the above tables), and ODS flanges, all other flanges are machined to Wolf - Linde dimensions. In 1998, Phillips acquired the manufacturing rights to the flanges and check valves formerly sold by Wolf-Linde, Inc.

For more information, please click on the Wolf-Linde logo to the right to be directed to an old Wolf-Linde catalog: Wolf-Linde

***Please consult our factory for specialty flange inquiries such as reducing flanges, and flanges with copper connections.***

**H. A. Phillips & Co.**
770 Enterprise Avenue
DeKalb, IL 60115 U.S.A.
Phone: (630) 377-0050
Fax: (630) 377-2706


MEMBER RETA

MEMBER iiar International Institute of Ammonia Refrigeration